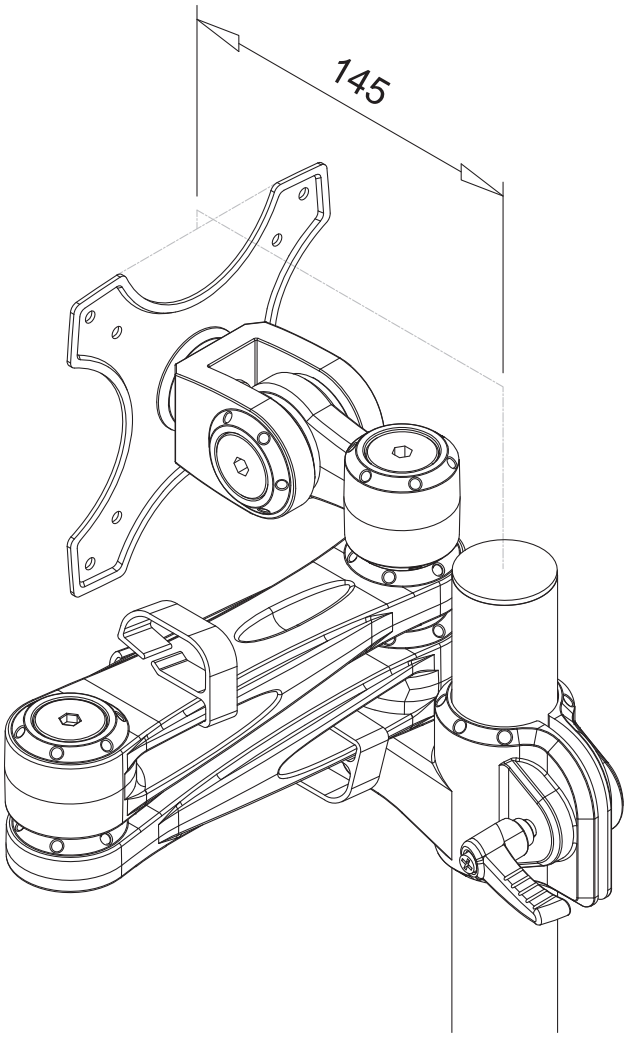
145

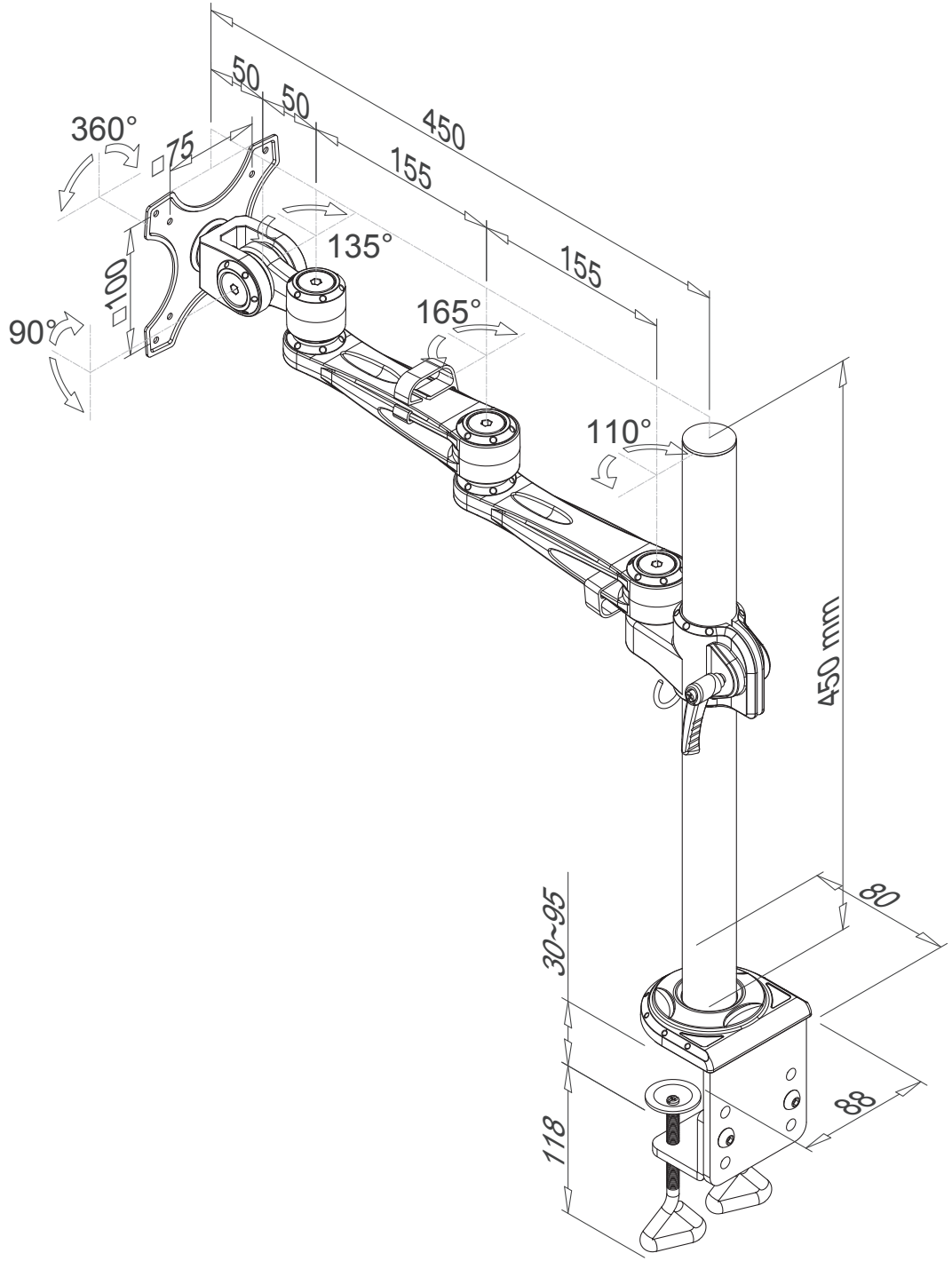

Neomounts

Measuring unit: mm