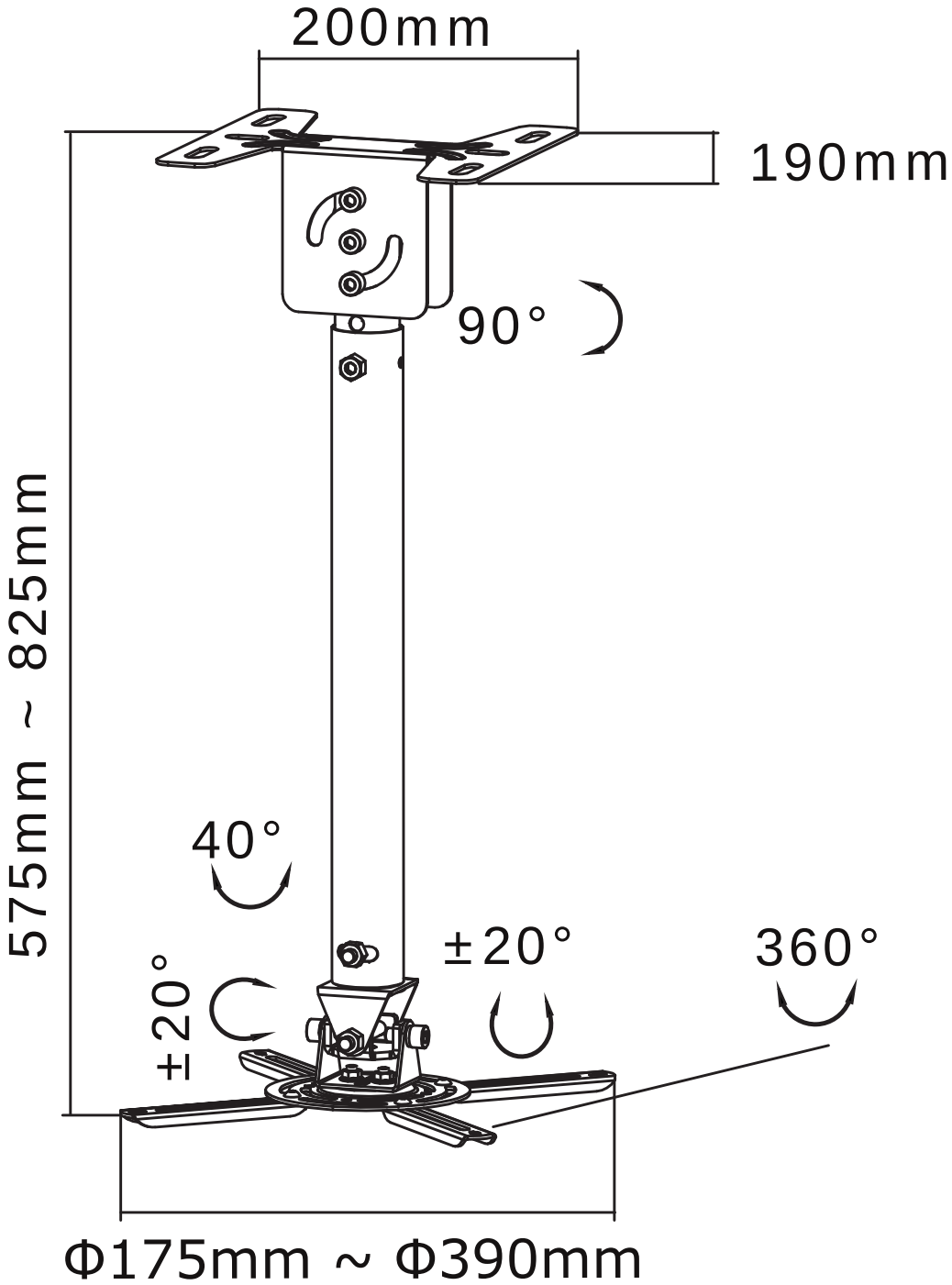
200mm
190mm
90°
575mm ~ 825mm
40°
±20°
±20°
360°
Φ175mm ~ Φ390mm